Polar Bear Thermostat to Daikin Intesis Interface (INT-DAI)

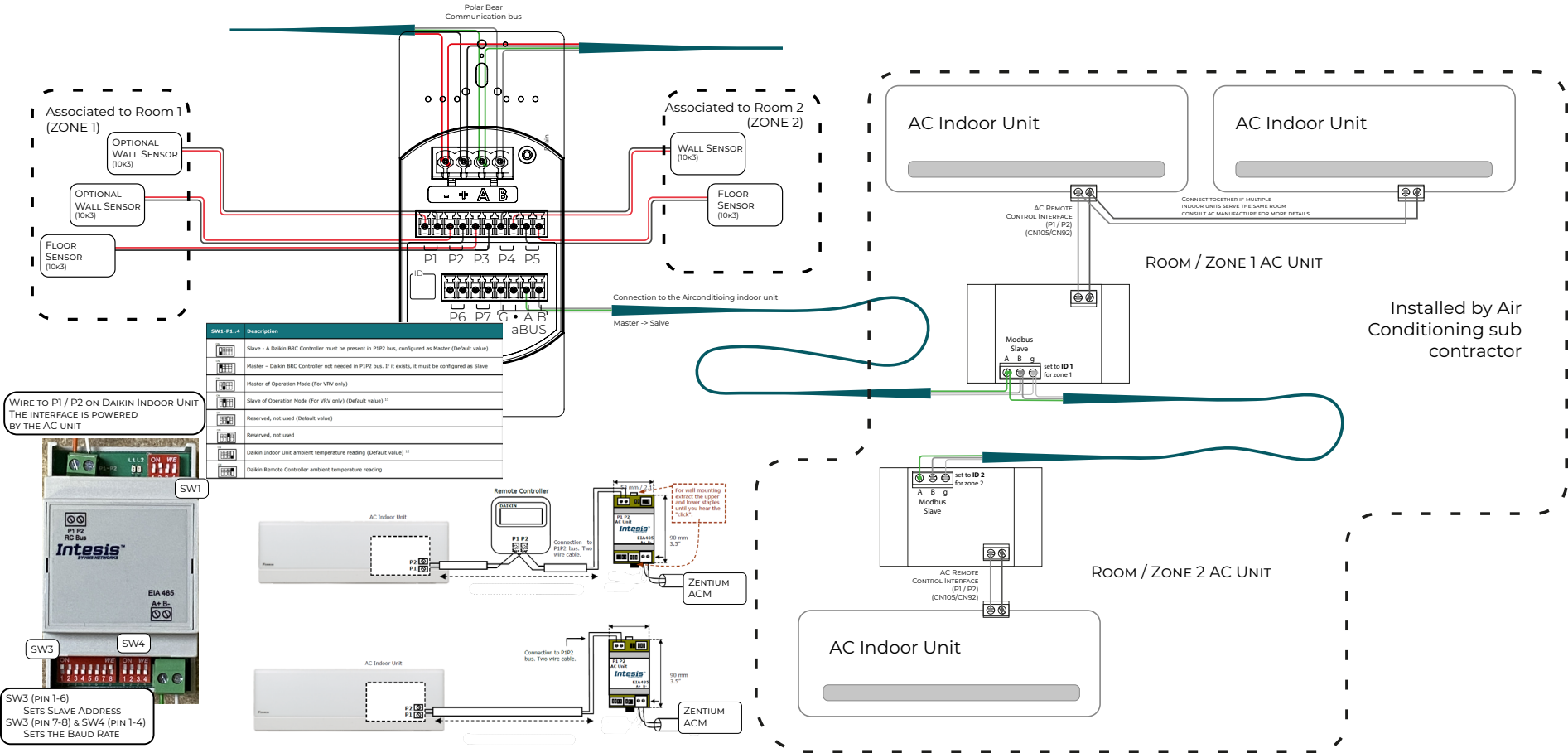

SW1-P1..4	Description
	Slave - A Daikin BRC Controller must be present in P1P2 bus, configured as Master (Default value)
	Master – Daikin BRC Controller not needed in P1P2 bus. If it exists, it must be configured as Slave
	Master of Operation Mode (For VRV only)
	Slave of Operation Mode (For VRV only) (Default value) [11]
	Reserved, not used (Default value)
	Reserved, not used
	Daikin Indoor Unit ambient temperature reading (Default value) [12]
	Daikin Remote Controller ambient temperature reading